Raindance Select E
Overhead shower 300 2jet 2.5 GPM
Surfaces: **Chrome** Article Number: **27387001**

Description

product features

- shower head size: 300 mm
- spray type: RainAir (rain spray enriched with air), Rain
- ball-joint: overhead shower angle adjustable
- maximum flow rate at 3 bar: 9,5 l/min
- Select button on overhead shower
- fully finished matching spray face
- material spray disc: metal
- spray disc removable for cleaning
- installation: ceiling or wall
- suitable for continuous flow water heaters with an output of 18 kW
- scope of supply: overhead shower, assembly instruction

Technology

Certificates

Product image
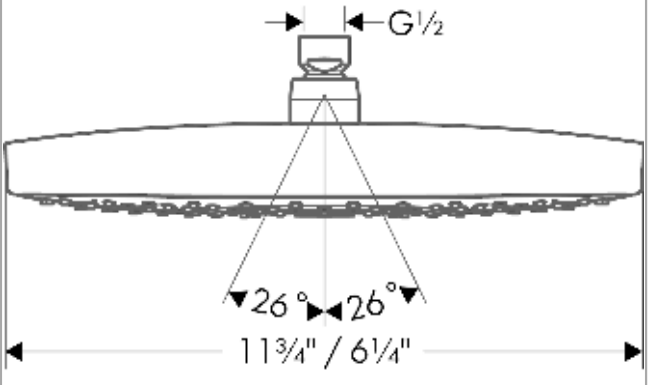
Scale drawing