PuraVida
Electronic basin mixer with temperature control mains connection 230 V
Surfaces: **Chrome** Article Number: **15172000**

Description

product features

- ComfortZone 130
- projection 129 mm
- flow rate at 3 bar: 5 l/min
- suitable for continous flow water heaters
- 230 V / 50 Hz mains connection
- hygiene rinse activatable (automatic water flow for 10 seconds every 24 hours following the last operation)
- permanent rinse activatable (single water flow for 180 seconds, suitable for thermal disinfection)
- performance may be impaired if the sensor is obscured by the design of the wash basin, or when the wash basin is oversized and the distance between sensor and the wash basin edge is larger than 75 mm
- functional restriction due to too large distance
- TÜV certified
- two filter units with fine filter to protect from incoming dirt, for assembly on existing angle valves, filter element can be removed and cleaned
- scope of supply: Electronic basin mixer, connection hoses, fixing set, power supply, angle valves, filter units, filters, mounting material, assembly instruction
- not included: waste set

Technology

Air Power | Eco Smart | Comfort Zone

Certificates

WaterMark

Product image

Scale drawing

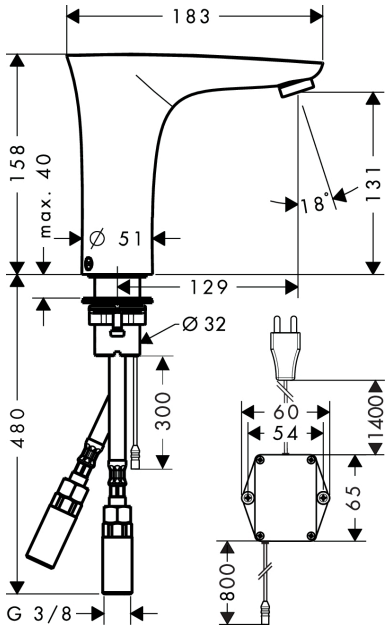

PuraVida
Electronic basin mixer with temperature control mains connection 230 V
Surfaces: **Chrome** Article Number: **15172000**
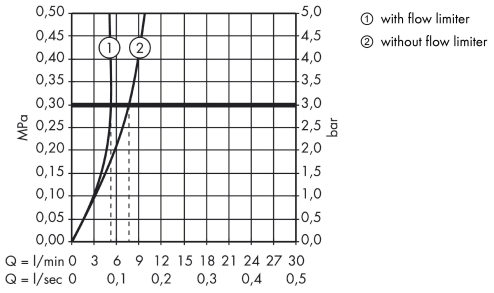
Flowchart