Argent

# GRACE 1720 OVAL FREESTANDING BATH

## Product Image

## Technical Specification

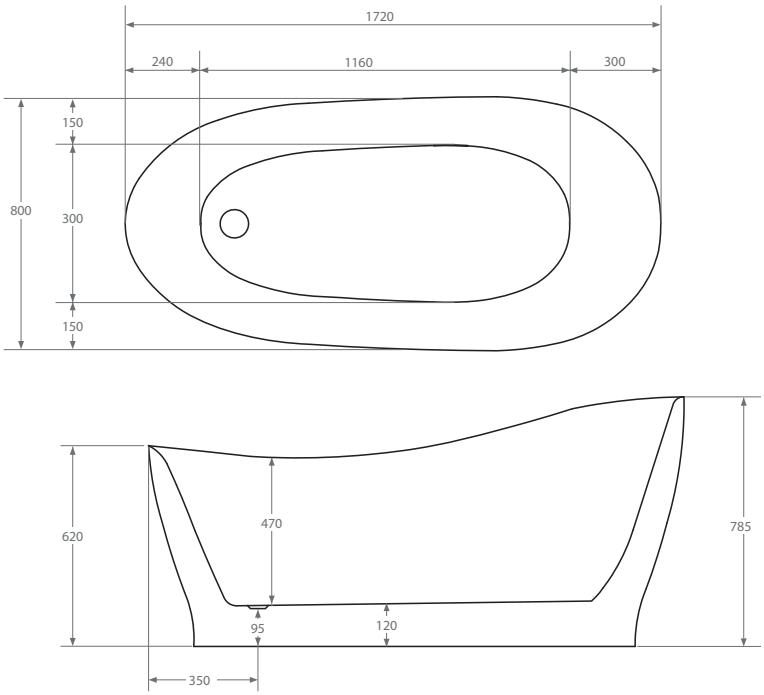


Please allow a 1-3mm tolerance on all measurements.

## Description

**Grace 1720 Oval Freestanding Bath**

**FS809217** 1720 x 800 x 800mm

## Additional Information

- Lucite-Sanitary grade acrylic
- No overflow
- Gloss Finish - Anti Yellowing
- Waste not included
- Reinforced waste area
- Solid base support system
- Stainless Steel adjustable feet
- Bath Weight - 47kg