PURO UNDERCOUNTER WASHBASIN

- elegant rectangular washbasin in a classically minimalist design
- reduced precise edges
- very generous interior dimensions
- clean and timeless lines – immortalised in long-lasting KALDEWEI steel enamel
- harmonises perfectly with the PURO bath series
- designed by Anke Salomon

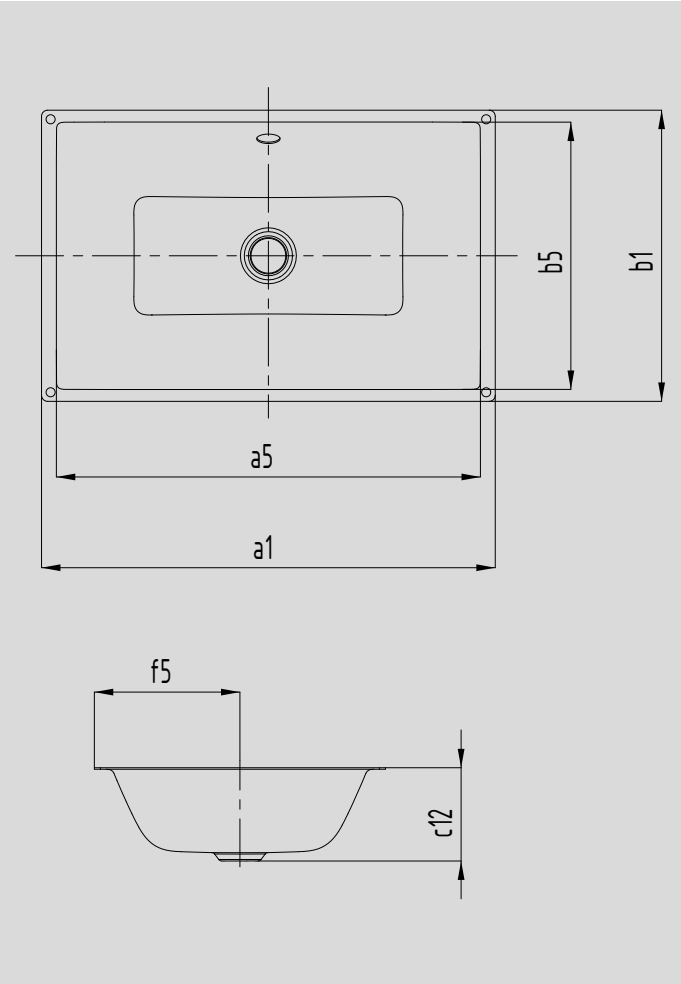

Similar illustrations

Model No.		3159	3160	3161
External length	a1	460	600	900 mm
Internal length	a5	421	561	860 mm
External width	b1	385	385	385 mm
Internal width	b5	354	354	354 mm
Distance basin surface to bottom edge of waste hole	c12	115	125	125 mm
Distance outer edge to centre of waste hole	f5	192,5	192,5	192,5 mm
Weight of the enamelled washbasin in kg		4,6	5,8	8,9

Subject to technical alterations, tolerances and errors. Similar illustrations.

KALDEWEI