TECEvelvet (2003 – 2020) + (2021, ...)

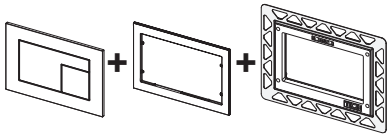

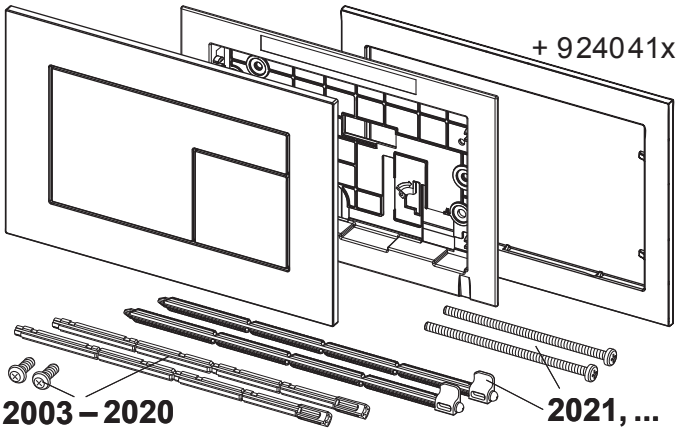

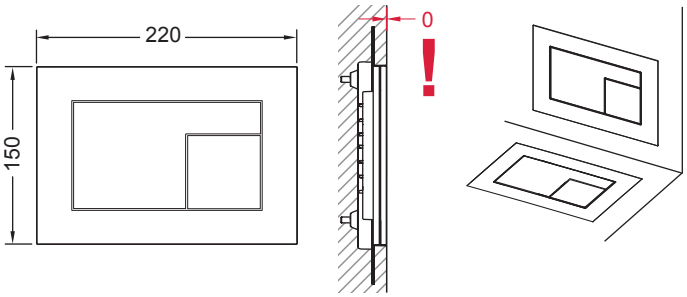

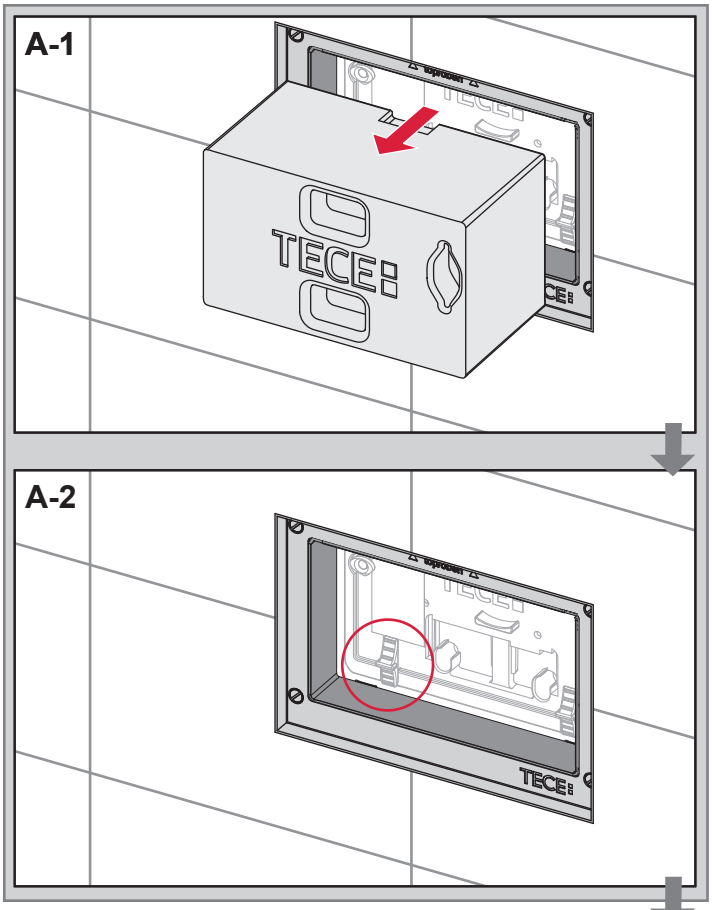

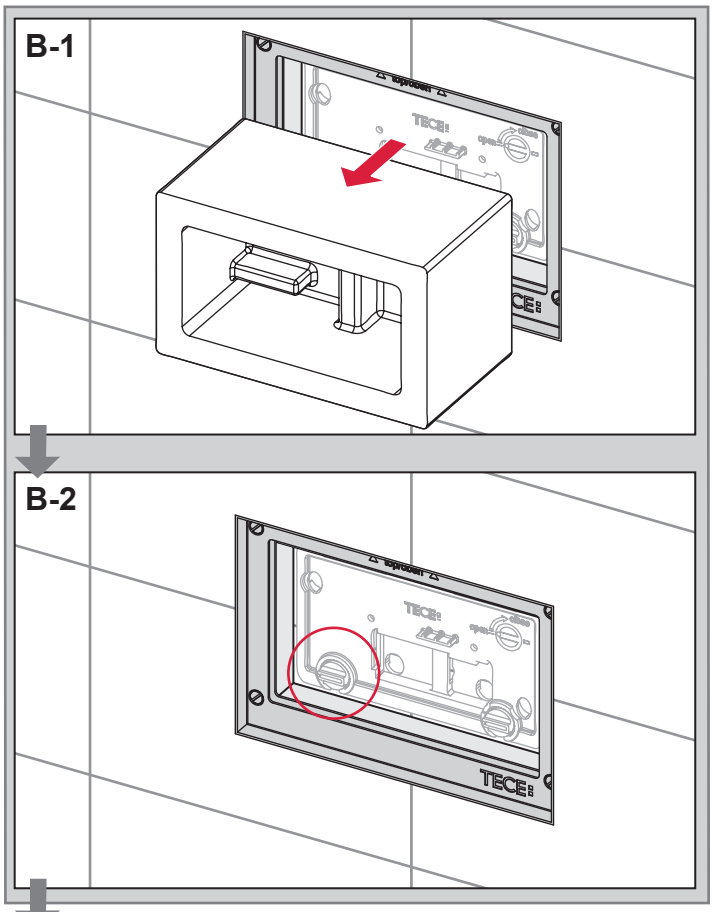

A/B

2021, ...

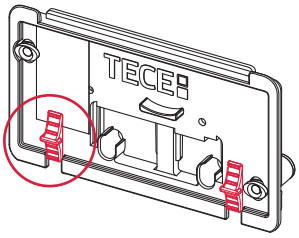

Seite 2-3/page 2-3

2003 – 2020

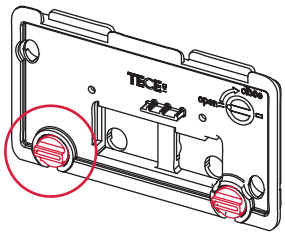

Seite 4-5/page 4-5

TECEvelvet (2021, ...)

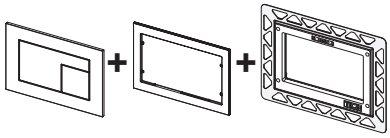

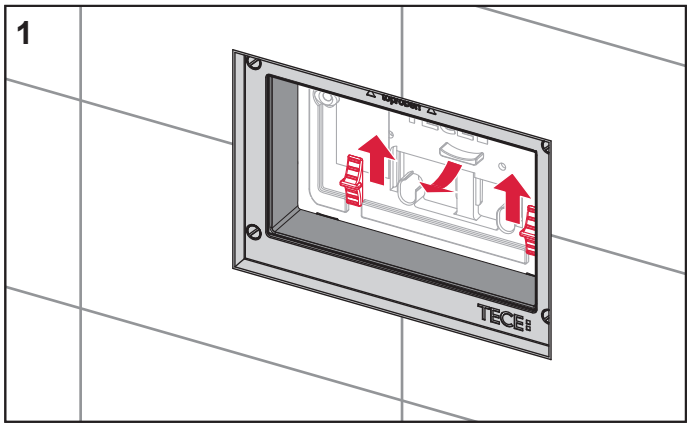

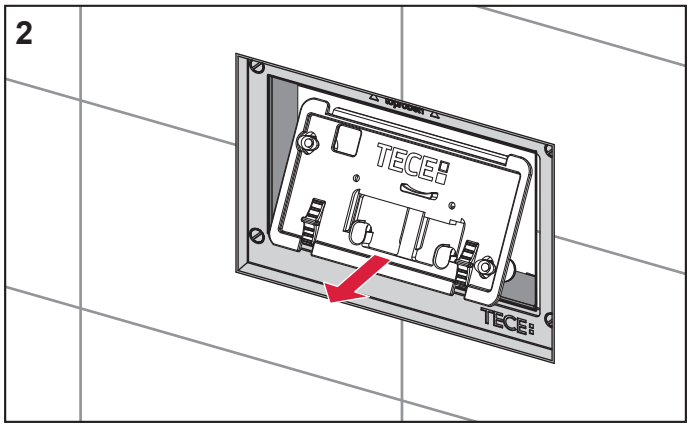

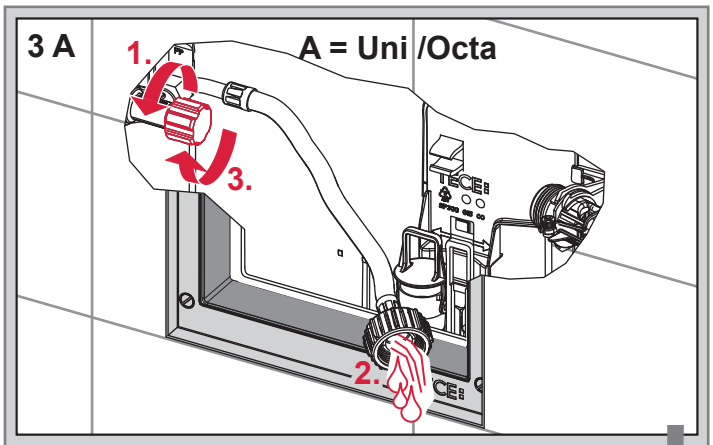

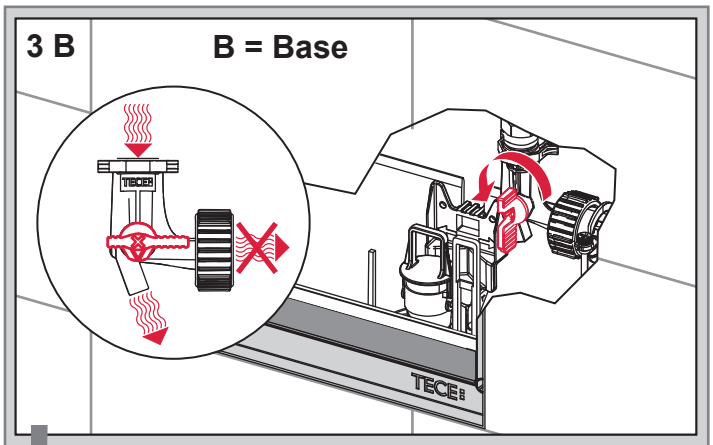

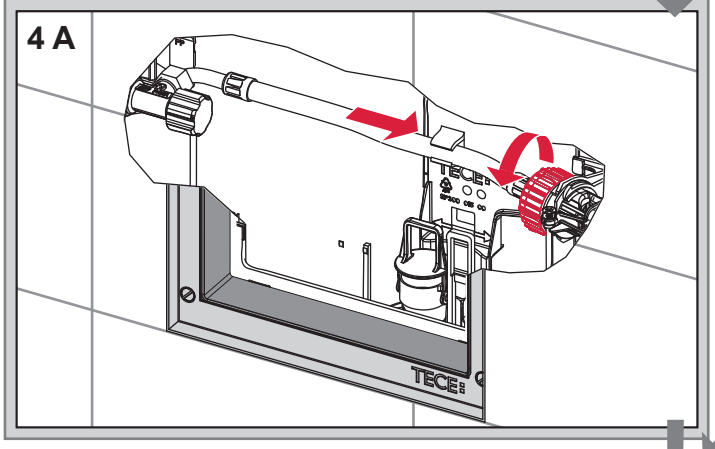

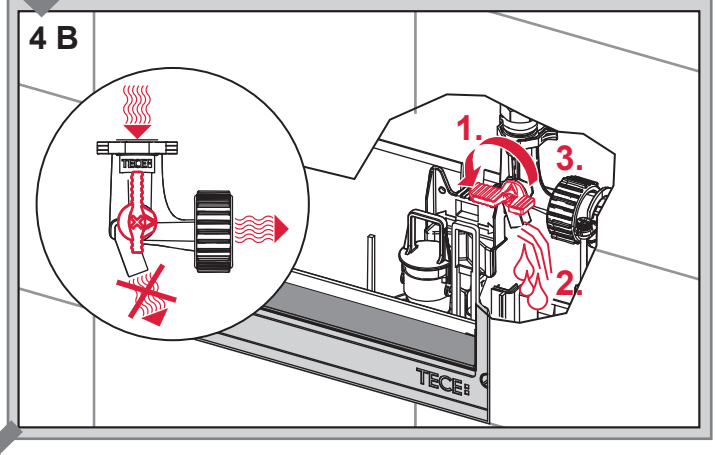

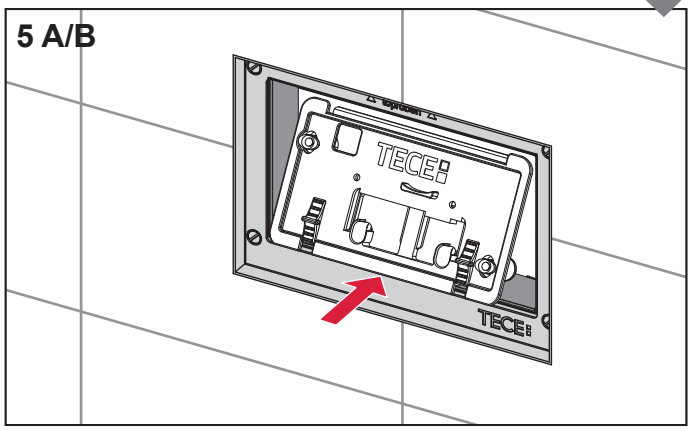

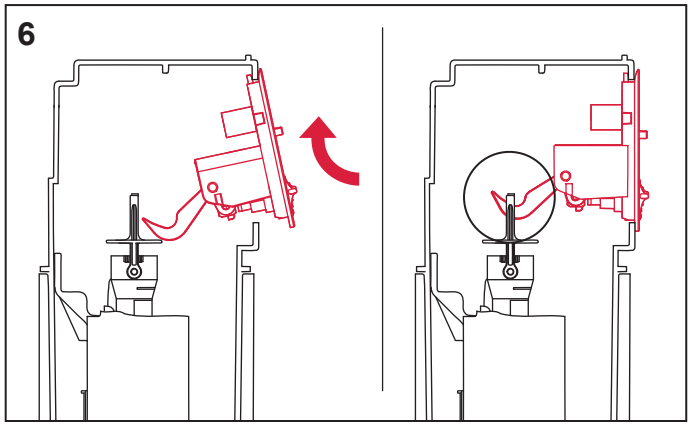

TECEvelvet (2021, ...)

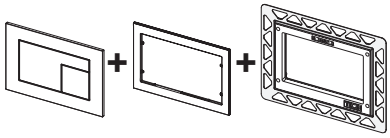

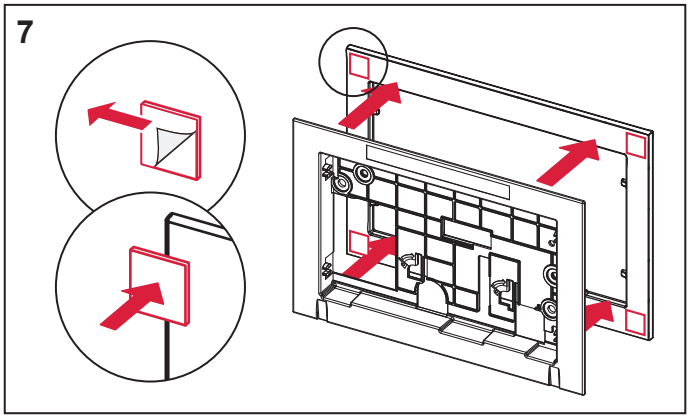

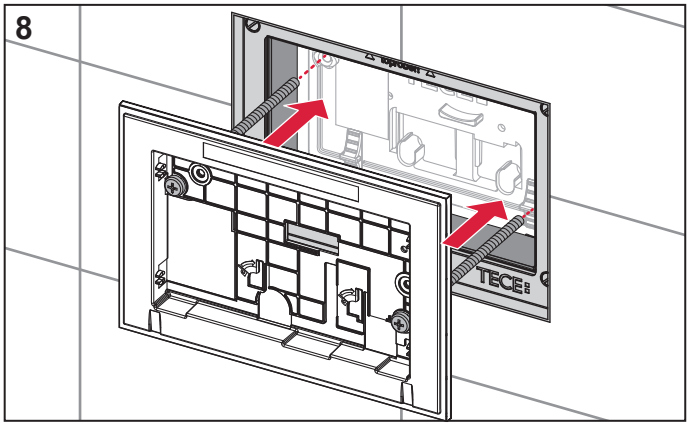

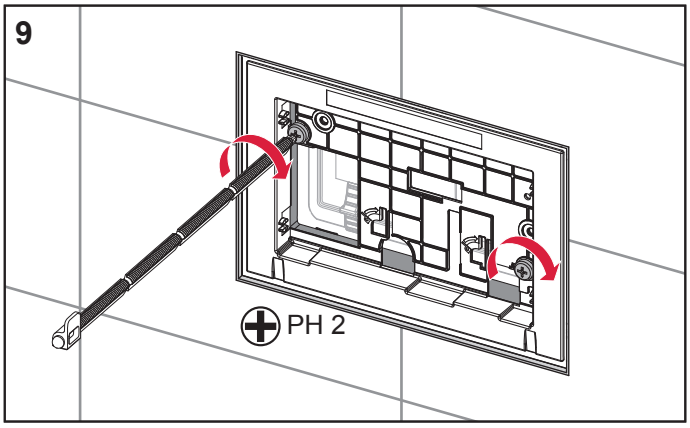

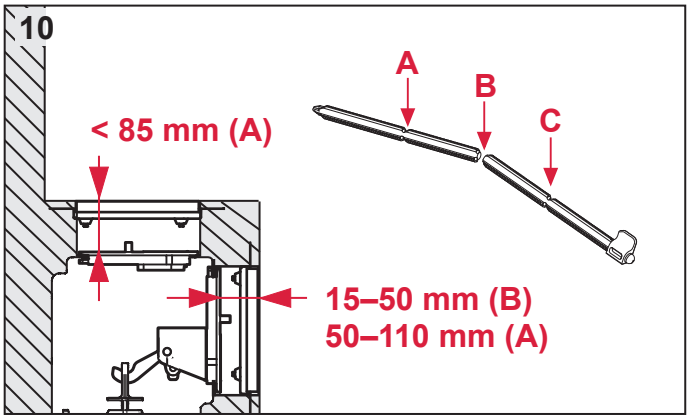

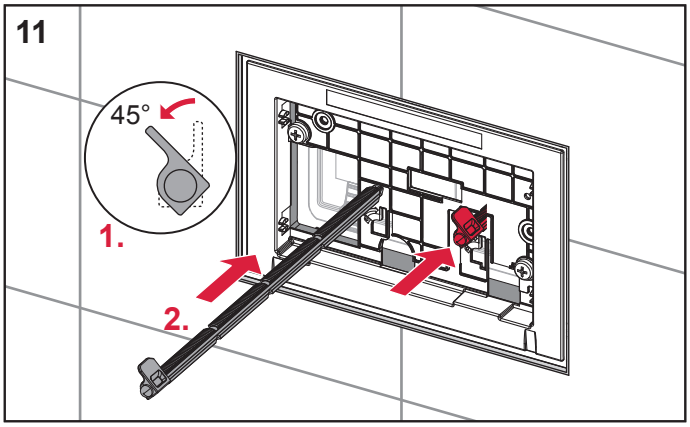

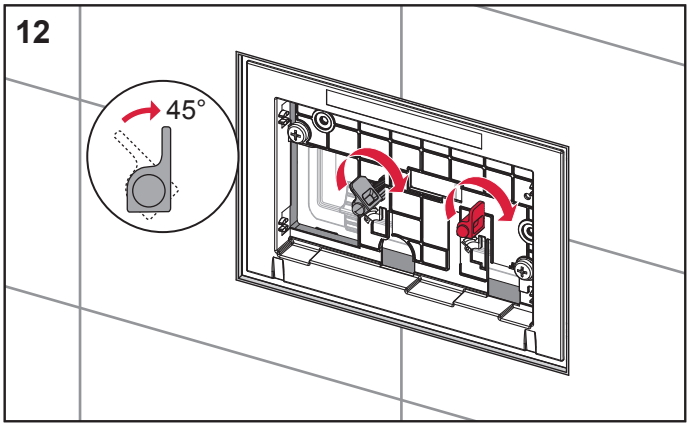

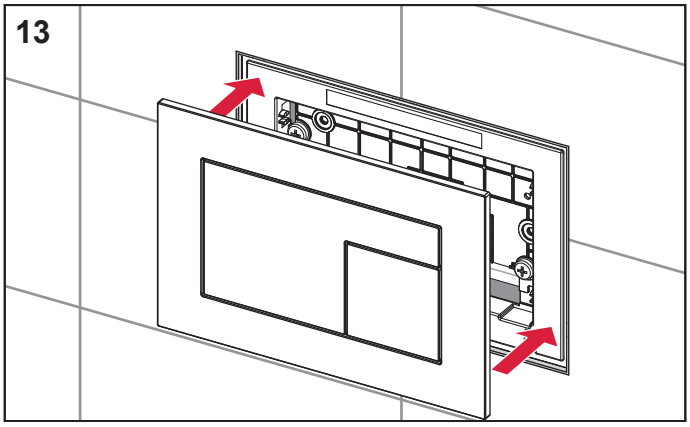

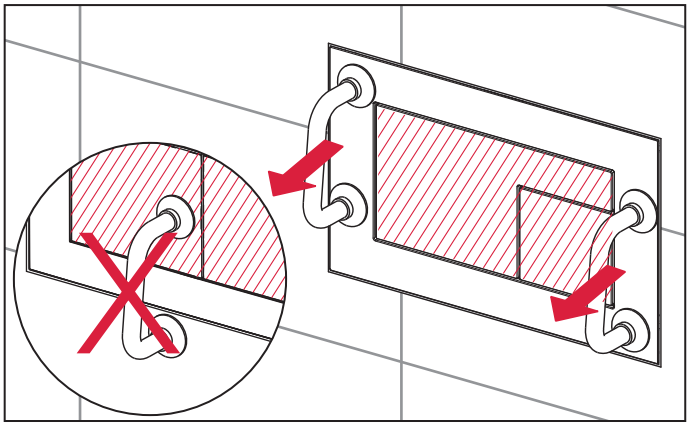

TECEvelvet (2003 – 2020)

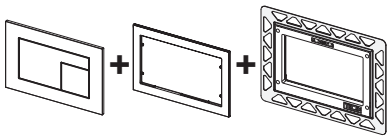

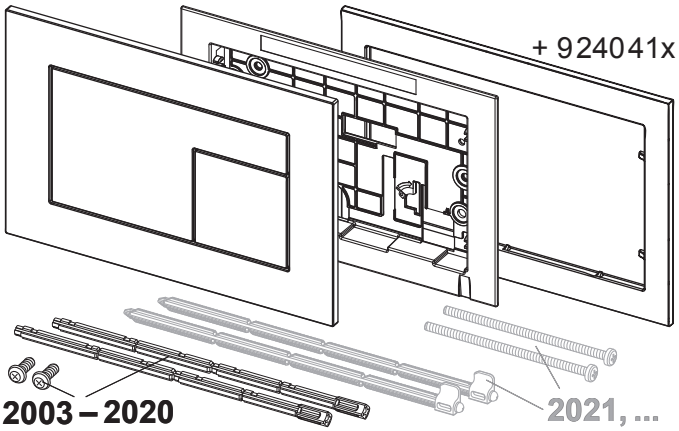

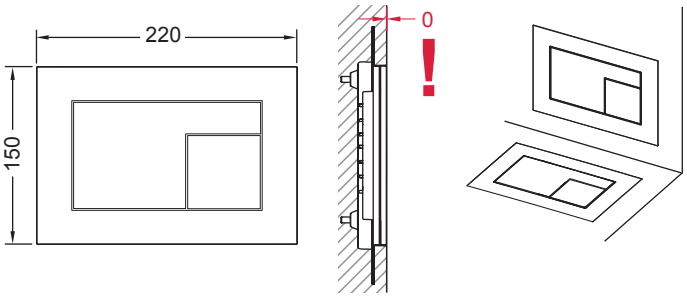

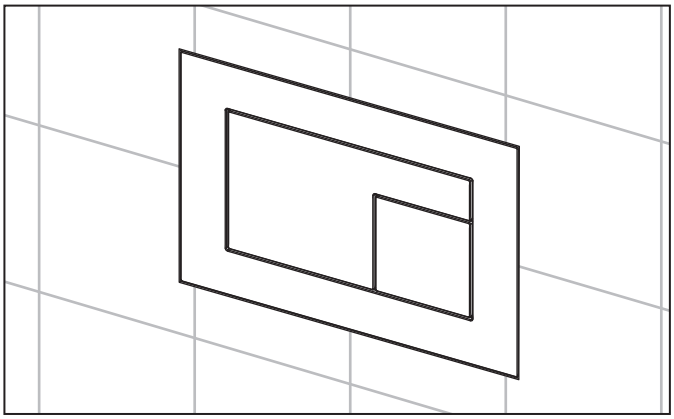

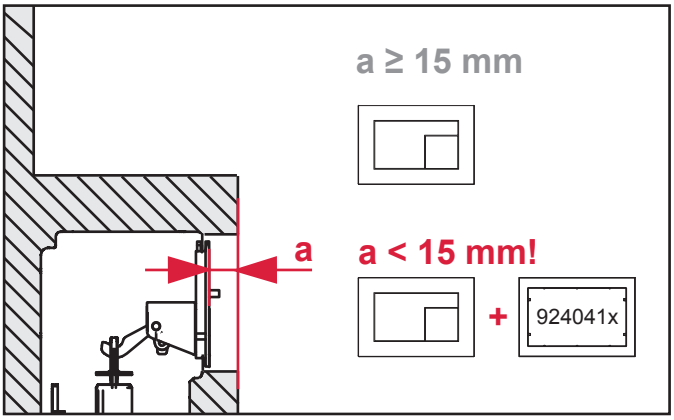

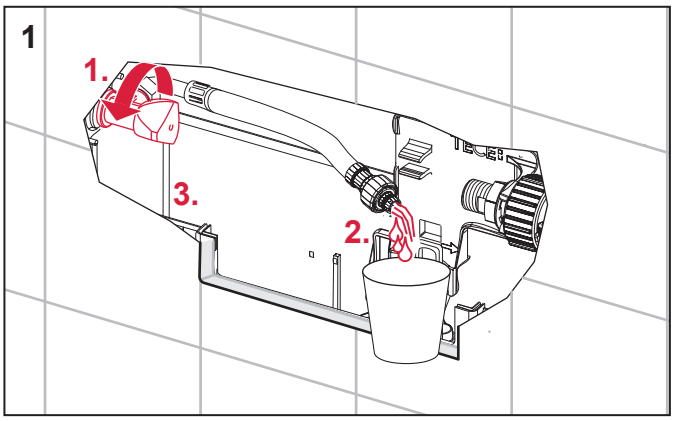

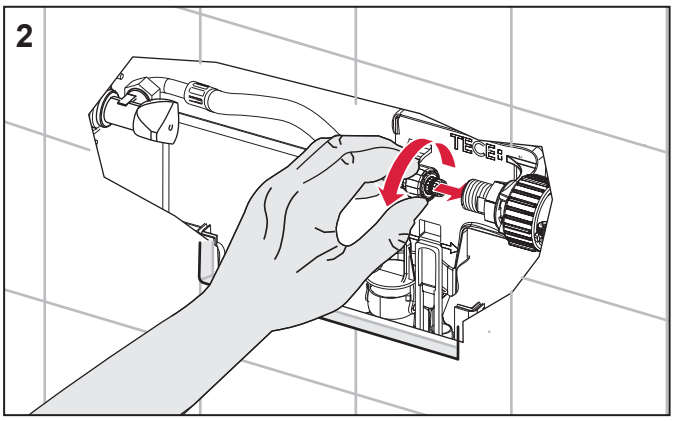

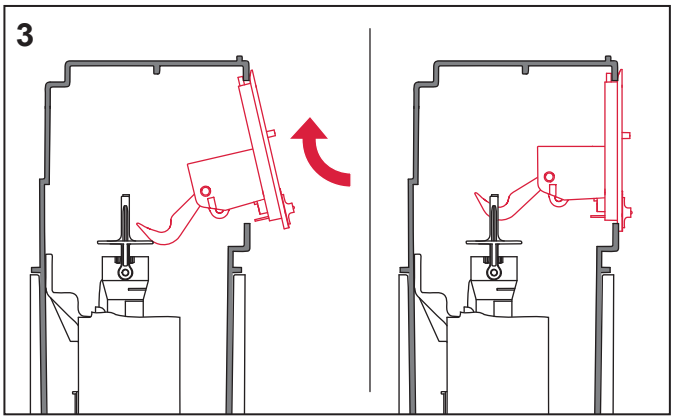

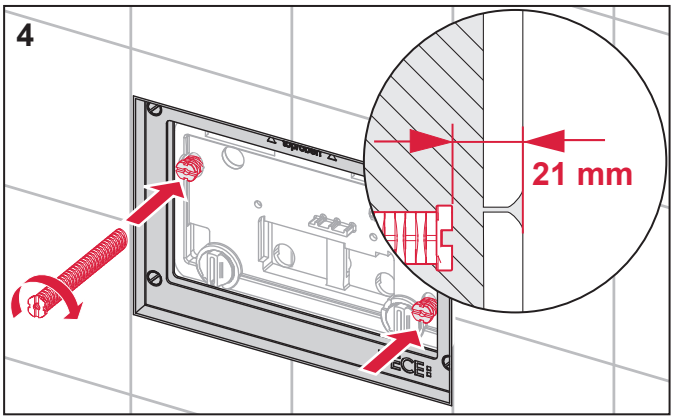

TECEvelvet (2003 – 2020)

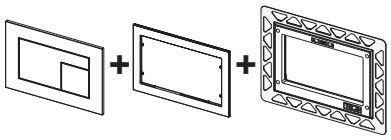

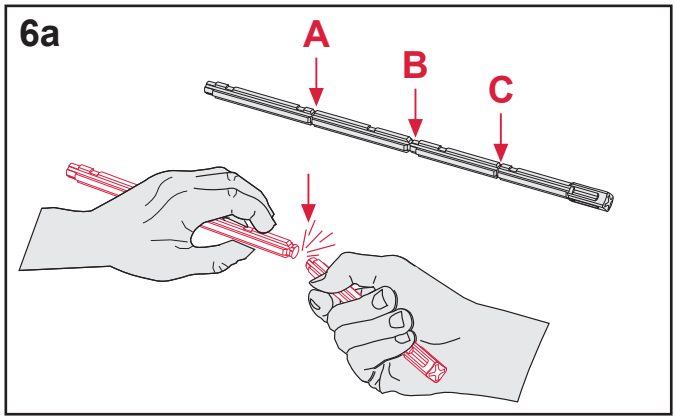

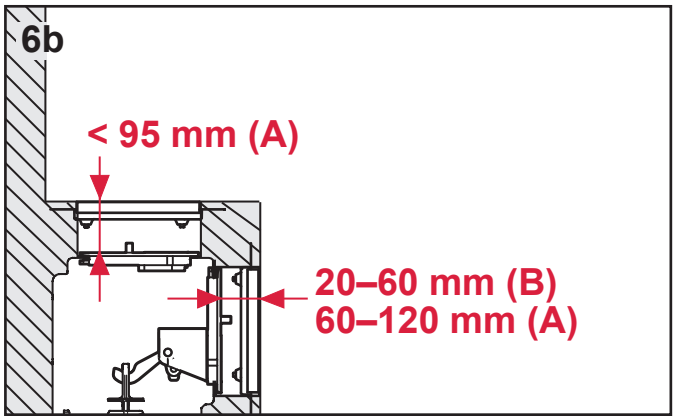

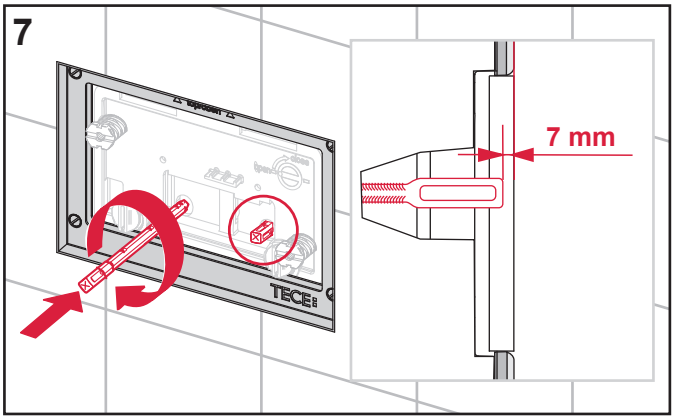

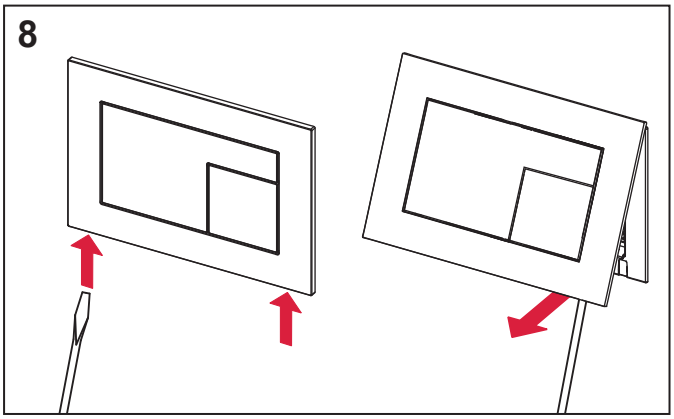

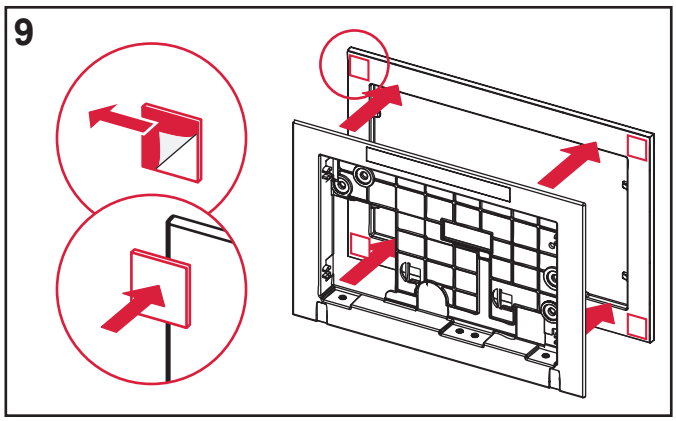

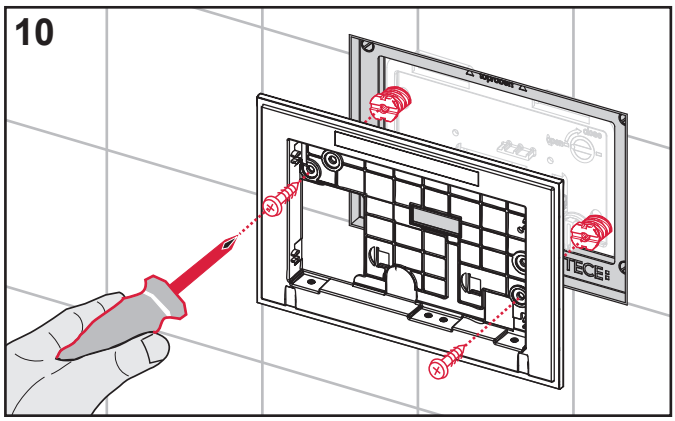

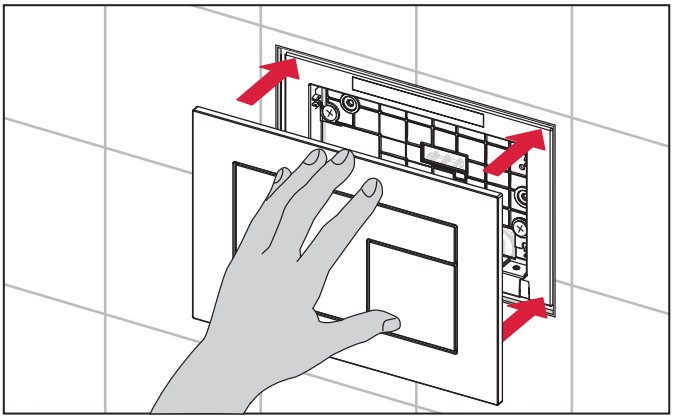

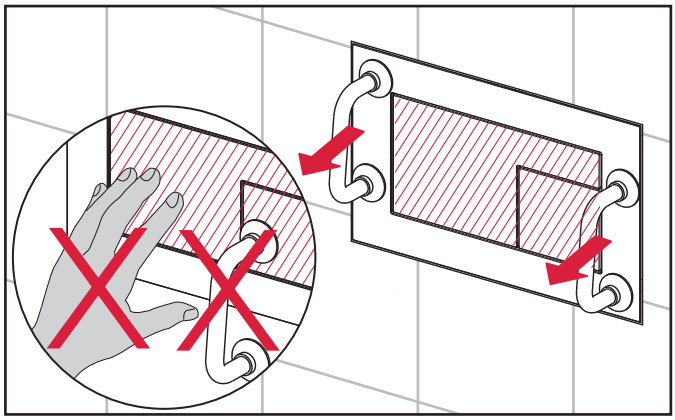

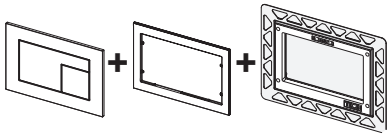

SP430 172 00 a