INWALL CISTERN CARE AND INSTALLATION GUIDE

Villeroy & Boch
1748

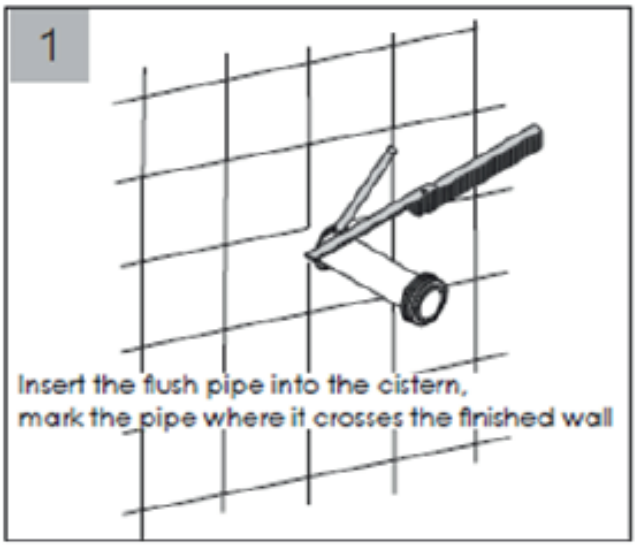

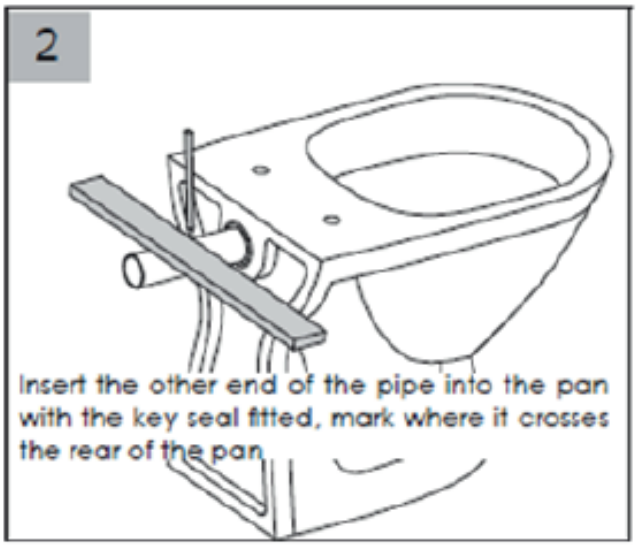

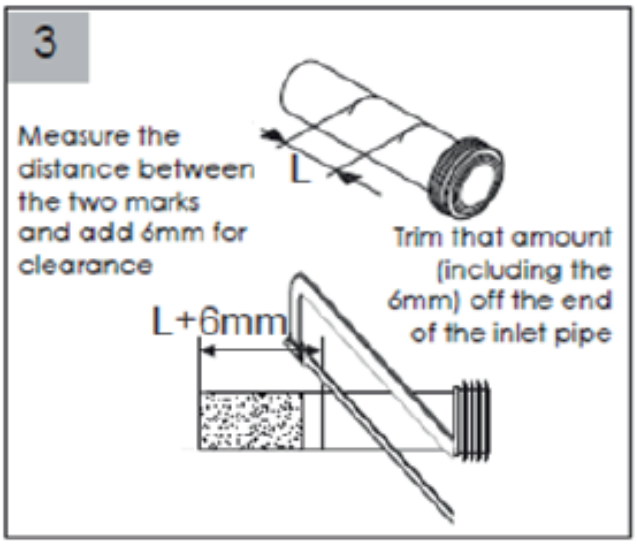

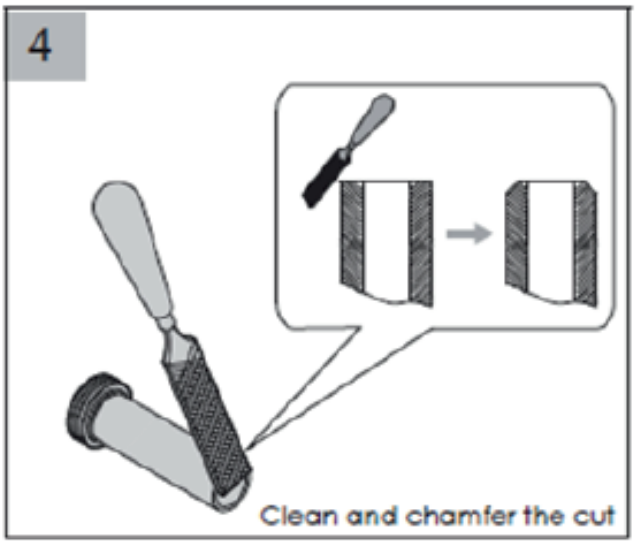

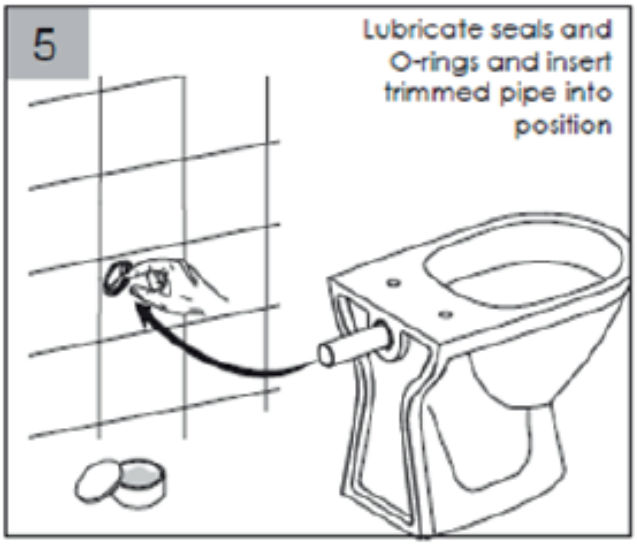

- Install toilet seat as per the manufacturers installation instruction included in the carton

Technical Hotline 1800 356 717

Customer Central 1300 364 748

support@customer-central.com.au

www.argentaust.com.au