TOILETS

CS901VC

NEOREST NX II
Luxurious Smart Toilet

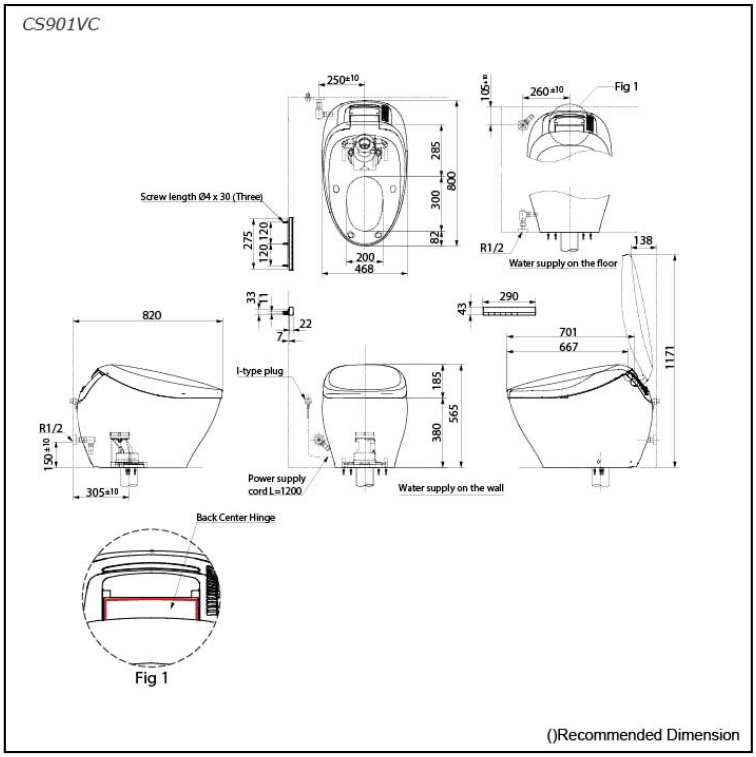

Features

- Luxury, elegant and seamless design
- Revolutionary technology, ACTILIGHT, ridding both visible and invisible waste
- Hybrid Ecology System
  - WATER SAVING dual flush 4.5 / 3L
- HEATED SEAT with temperature control
- PREMIST, a fine spray of mist making it difficult for dirt to adhere
- EWATER+ keeps toilet bowl and nozzle clean by preventing bacteria with sanitizing effect
- Auto powerful DEODORIZER activates after every usage
- Auto Soft light function usable for night time usage
- Adjustable WARM AIR DRYING
- Automatically cleans the wand
- AIR-IN WONDERWAVE cleansing provides comfort and eco-friendliness

  ACTILIGHT, cutting-edge technology. Photocatalytic glaze with UV light fired onto the bowl that breaks down microscopic waste pacticles

Specifications

Flush system:	TORNADO FLUSH
Water Use:	4.5L / 3L
Rough-in:	305 mm
Bowl Shape:	Elongated
Water Pressure:	0.2MPa~0.75MPa
Power Rating:	220~240V, 50/60Hz, 835~845W
Length of Power Cord:	1.2 m
Material:	Bowl -Vitreous China Seat & Cover -Plastic Remote Controller -Aluminium
Size:	468Wx800Dx565H mm

Parts description

- **CS901VC**
  Water Closet Bowl (S-Trap)
  (Rough-in 305)

Optional Parts

- T53P100VR
  Floor Flange

Colors

White (CEFIONTECT)
- Water Closet Bowl

French Gold
- Back Center Hinge
- Remote Controller

Certifications

WaterMark

Please consult a TOTO representative for more details

All rights reserved by TOTO company. Specifications and sizes are subject to change without notice.